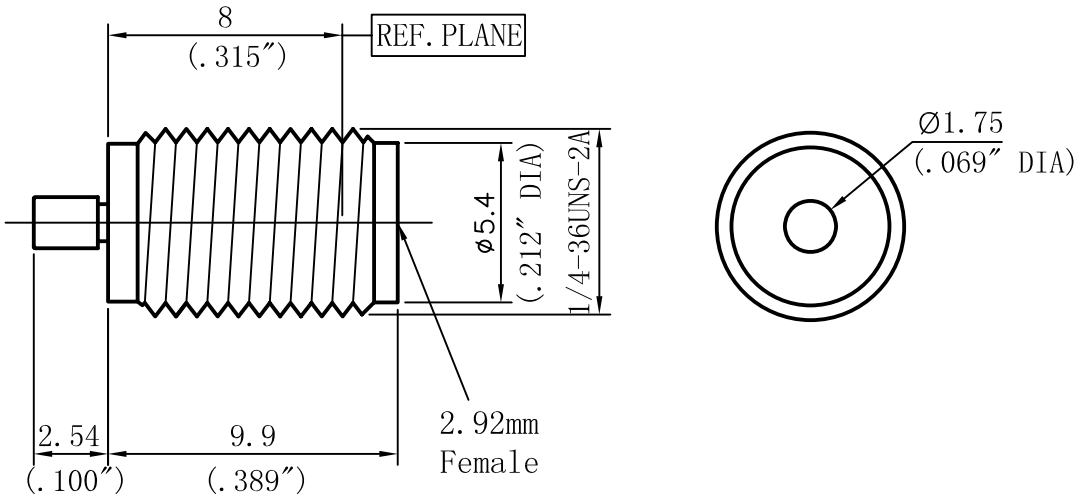

Performance Features:

Nominal Impedance: 50Ω
Frequency Range: DC-40GHz
VSWR: DC-40GHz.... 1.15:1 (Max)

Materials/Finishes:

Housing: SU303F
Polished & Passivated
Center Contact: Beryllium Copper
Gold Plated
Insulators: PTFE&PEI

MicrowaveTown Company, LLC
1283 E. Route 66 Ave.
Glendora, CA 91741
Tel:(626)241-9635
Fax:(626)698-1638
www.microwavetown.com

PROPRIETARY INFORMATION: THE INFORMATION IN THIS DRAWING IS PROPRIETARY AND SHALL NOT BE USED OR DISCLOSED WITHOUT PRIOR WRITTEN PERMISSION FROM MICROWAVETOWN

LTR	DESCRIPTION	DATE	APPR.

DIRECTION OF VIEW

UNIT: mm

DRAWN	Xiaolu Yu
CHECKED	Haimin Zhang
APPR.	Gang Cao

UNLESS OTHERWISE SPECIFIDE
1. REMOVE ALL BURRS, BREAK ALL CORNERS, SHARP EDGES 0.05 R MAX
2. LINEARITY TOLERANCES ±0.1, ANGLE TOLERANCES ±1°
3. DIAMETERS ON COMMON CENTERS TO BE CONCENTRIC WITHIN 0.1
4. ALL DIMENSIONS ARE AFTER PLATING. SURFACE FINISHED

DO NOT SCALE DRAWING

TITLE: SMA Connector

DWG NO. D360L69Y01-100

OUTLINE DRAWING

SIZE	SCALE	REV.	SHEET
A4_h	4:1	V2.0	1/1